Instruction 510-0227
09-16-13
Copyright © 2013
by S&S® Cycle, Inc.

All rights reserved.
Printed in the U.S.A.

S&S® Cycle, Inc.

14025 Cty Hwy G PO Box 215
Viola, Wisconsin 54664
Phone: 608-627-1497 • Fax: 608-627-1488
Technical Service Phone: 608-627-TECH (8324)
Technical Service Email: sstech@sscycle.com
Website: www.sscycle.com

Installation Instructions: S&S® Street Performance .585" Round Wire Conical Valve Spring Kits

DISCLAIMER:
S&S parts are designed for high performance, closed course, racing applications and are intended for the very experienced rider only. The installation of S&S parts may void or adversely affect your factory warranty. In addition such installation and use may violate certain federal, state, and local laws, rules and ordinances as well as other laws when used on motor vehicles used on public highways, especially in states where pollution laws may apply. Always check federal, state, and local laws before modifying your motorcycle. It is the sole and exclusive responsibility of the user to determine the suitability of the product for his or her use, and the user shall assume all legal, personal injury risk and liability and all other obligations, duties, and risks associated therewith.

The words Harley®, Harley-Davidson®, H-D®, Sportster®, Evolution®, and all H-D part numbers and model designations are used in reference only. S&S Cycle is not associated with Harley-Davidson, Inc.

SAFE INSTALLATION AND OPERATION RULES:

Before installing your new S&S part it is your responsibility to read and follow the installation and maintenance procedures in these instructions and follow the basic rules below for your personal safety.

- Gasoline is extremely flammable and explosive under certain conditions and toxic when breathed. Do not smoke. Perform installation in a well ventilated area away from open flames or sparks.
- If motorcycle has been running, wait until engine and exhaust pipes have cooled down to avoid getting burned before performing any installation steps.
- Before performing any installation steps disconnect battery to eliminate potential sparks and inadvertent engagement of starter while working on electrical components.
- Read instructions thoroughly and carefully so all procedures are completely understood before performing any installation steps. Contact S&S with any questions you may have if any steps are unclear or any abnormalities occur during installation or operation of motorcycle with a S&S part on it.
- Consult an appropriate service manual for your motorcycle for correct disassembly and reassembly procedures for any parts that need to be removed to facilitate installation.
- Use good judgment when performing installation and operating motorcycle. Good judgment begins with a clear head. Don't let alcohol, drugs or fatigue impair your judgment. Start installation when you are fresh.
- Be sure all federal, state and local laws are obeyed with the installation.
- For optimum performance and safety and to minimize potential damage to carb or other components, use all mounting hardware that is provided and follow all installation instructions.
- Motorcycle exhaust fumes are toxic and poisonous and must not be breathed. Run motorcycle in a well ventilated area where fumes can dissipate.

IMPORTANT NOTICE:

Statements in this instruction sheet preceded by the following words are of special significance.

WARNING

Means there is the possibility of injury to yourself or others.

CAUTION

Means there is the possibility of damage to the part or motorcycle.

NOTE

Other information of particular importance has been placed in italic type.

S&S recommends you take special notice of these items.

WARRANTY:
All S&S parts are guaranteed to the original purchaser to be free of manufacturing defects in materials and workmanship for a period of twelve (12) months from the date of purchase. Merchandise that fails to conform to these conditions will be repaired or replaced at S&S's option if the parts are returned to us by the purchaser within the 12 month warranty period or within 10 days thereafter.
In the event warranty service is required, the original purchaser must call or write S&S immediately with the problem. Some problems can be rectified by a telephone call and need no further course of action.
A part that is suspect of being defective must not be replaced by a Dealer without prior authorization from S&S. If it is deemed necessary for S&S to make an evaluation to determine whether the part was defective, a return authorization number must be obtained from S&S. The parts must be packaged properly so as to not cause further damage and be returned prepaid to S&S with a copy of the original invoice of purchase and a detailed letter outlining the nature of the problem, how the part was used and the circumstances at the time of failure. If after an evaluation has been made by S&S and the part was found to be defective, repair, replacement or refund will be granted.

ADDITIONAL WARRANTY PROVISIONS:
(1) S&S shall have no obligation in the event an S&S part is modified by any other person or organization.
(2) S&S shall have no obligation if an S&S part becomes defective in whole or in part as a result of improper installation, improper maintenance, improper use, abnormal operation, or any other misuse or mistreatment of the S&S part.
(3) S&S shall not be liable for any consequential or incidental damages resulting from the failure of an S&S part, the breach of any warranties, the failure to deliver, delay in delivery, delivery in non-conforming condition, or for any other breach of contract or duty between S&S and a customer.
(4) S&S parts are designed exclusively for use in Harley-Davidson® and other American v-twin motorcycles. S&S shall have no warranty or liability obligation if an S&S part is used in any other application.

This instruction sheet covers the following S&S valve spring kits:

Kit	Application
900-0593	1984-2004 Harley-Davidson® big twin, 1986-2003 XL
900-0594	2005-2014 Harley-Davidson big twin, 2004-2014 XL
900-0595	S&S Super Stock® and X-Wedge® cylinder heads
900-0596	S&S CNC Ported Head 1999-2013 BT, 2004-2013 XL

CAUTION

Do not mix springs, collars or any other components between S&S Sidewinder spring kits and other S&S spring kits. Extensive engine damage can result and is not covered under warranty.

WARNING

The safety of the motorcycle rider is dependent of proper installation of this product. If you are not certain of your capabilities or do not have the correct tools for this installation, please consult a professional mechanic. Improper installation of this product could result in injury or death to the rider.

Disassembly

1. Remove heads from engine and disassemble.
2. If cylinder heads/valves are to be reconditioned, proceed at this time according to standard procedure.

Spring Installed Height Measurement and Installation

1. Using the following procedure, determine the spring height and clearance between top collar and valve guide.

a. Install the appropriate bottom collar based on which kit you are using.
b. Temporary install the valves.
c. Install the top collars and keepers. Pull the top collar tightly against the keepers to seat the keepers in the collar.

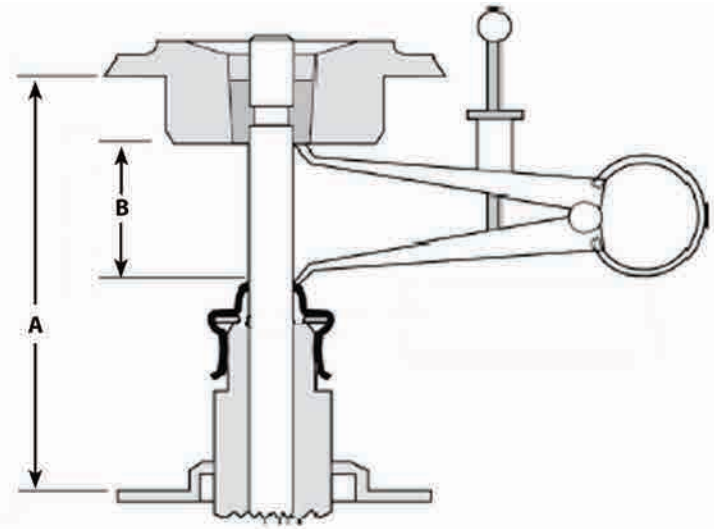

Fig. 1

Dimension A: Installed spring height must be adjusted to dimension in step 2.

Dimension B: Must be .060" greather than lift valve for camshaft to be used.

	Front Exhaust	Front Intake	Rear Intake	Rear Intake
Dimension A				
Dimension B				

d. While holding the valve firmly against the seat in the closed position, measure the installed spring height (distance between lower valve spring seating surface and bottom of top collar. **See Figure 1, below, left.** Record this measurement in the table below.
e. Measure distance between top collar keepers and top of the valve guide. **See Figure 1, Dimension B.** Distance must be at least .060" greater than the valve lift of the cam to be used.
f. Repeat steps a through e for remaining valves and record all measurements in the table. Be sure to keep track of all parts during assembly to assure they are installed in the same location as they were measured.

2. Adjust the installed spring heights with the provided shims (if necessary) so that the installed height of each spring equals 1.850"+.010/-.005"

TARGET INSTALLED HEIGHT	**1.85"**
SPRING FORCE AT INSTALLED HEIGHT	**135 LB**
MAXIMUM VALVE LIFT	**0.585"**
SPRING FORCE AT MAX VALVE LIFT	**325 LB**

NOTE: *If shims are used with kit #900-0594, they must be placed under the integral lower collar/seal #900-0591.*

3. Install valves and springs with the keepers and top collars provided. Note that the lobe of the S&S keeper must be placed in the top groove of the valve stem when installing kits 900-0594 and 900-0596

CAUTION

The keepers must be located in the groove closest to the tip of the valve. Any other groove will yield the incorrect installed height and may cause premature valve train failure. S&S is not responsible for incorrect installation. Consult an S&S dealer or S&S Sales Representative if you have any doubts as to the correct installation of this product. See Figure 2, below

4. Install the cylinder heads. When the remaining valve train components are assembled, rotate the engine a few times to ensure there is no binding in the valve train.

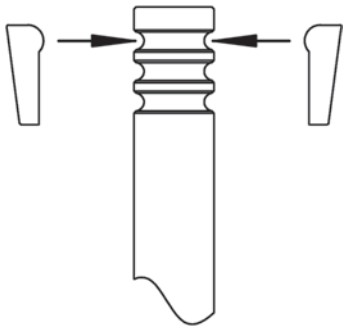

Fig. 2

CAUTION

- **Installing springs at height less than recommended dimension will cause rapid spring fatigue resulting in possible engine damage.**
- **Installing springs at height above recommended dimension will decrease spring tension resulting in possible valve float and engine damage.**
- **Failure to establish required clearances may cause valve seal failure and other, more extensive engine damage not covered under warranty.**

WARNING

Valve spring assembly is under considerable tension when compressed and is potentially dangerous. Wear eye protection and take due caution when checking for coil bind and during installation. After assembly, carefully strike tip of valve stem with plastic hammer to insure that keepers are seated. Direct spring assembly away from face and body during this procedure.

900-0593 Kit Contents		
Part Number	Quantity	Description
900-0550	4	Top collar
900-0549	4	Bottom collar
900-0444	4	Spring
90-2094-s	8	Valve Keeper
500-0013	4	0.015" Shim
500-0014	4	0.030" Shim
900-0594 Kit Contents		
Part Number	Quantity	Description
900-0550	4	Top collar
900-0591	4	Bottom collar
900-0444	4	Spring
106-5692	8	Valve Keeper
500-0013	4	0.015” Shim
500-0014	4	0.030” Shim
900-0595 Kit Contents		
Part Number	Quantity	Description
900-0550	4	Top collar
900-0600	4	Bottom collar
900-0444	4	Spring
90-2094-s	8	Valve Keeper
500-0013	4	0.015" Shim
500-0014	4	0.030" Shim
900-0596 Kit Contents		
Part Number	Quantity	Description
900-0550	4	Top collar
900-0549	4	Bottom collar
900-0444	4	Spring
106-5692	8	Valve Keeper
500-0013	4	0.015” Shim
500-0014	4	0.030” Shim