Instruction 51-1257
11-29-06

Copyright© 2005, 2006
by S&S Cycle, Inc.

All rights reserved.
Printed in the U.S.A.

S&S® Cycle, Inc.
235 Causeway Blvd.
La Crosse, Wisconsin 54603
Phone: 608-627-1497 • Fax: 608-627-1488
Technical Service Phone: 608-627-TECH (8324)
Technical Service Email: sstech@sscycle.com
Website: www.sscycle.com

Because every industry has a leader

Installation Instructions for S&S® Sidewinder® Valve Spring Kits for 1984-'04 Big Twin and 1986-'03 Four-Cam Engines (PN 90-2069)

DISCLAIMER:

S&S parts are designed for high performance, off road, racing applications and are intended for the very experienced rider only. The installation of S&S parts may void or adversely effect your factory warranty. In addition such installation and use may violate certain federal, state, and local laws, rules and ordinances as well as other laws when used on motor vehicles used on public highways, especially in states where pollution laws may apply. Always check federal, state, and local laws before modifying your motorcycle. It is the sole and exclusive responsibility of the user to determine the suitability of the product for his or her use, and the user shall assume all legal, personal injury risk and liability and all other obligations, duties, and risks associated therewith.

The words Harley®, Harley-Davidson®, H-D®, Sportster®, Evolution®, and all H-D part numbers and model designations are used in reference only. S&S Cycle is not associated with Harley-Davidson, Inc.

SAFE INSTALLATION AND OPERATION RULES:

Before installing your new S&S part it is your responsibility to read and follow the installation and maintenance procedures in these instructions and follow the basic rules below for your personal safety.

● Gasoline is extremely flammable and explosive under certain conditions and toxic when inhaled. Do not smoke. Perform installation in a well ventilated area away from open flames or sparks.

● If motorcycle has been running, wait until engine and exhaust pipes have cooled down to avoid getting burned before performing any installation steps.

● Before performing any installation steps disconnect battery to eliminate potential sparks and inadvertent engagement of starter while working on electrical components.

● Read instructions thoroughly and carefully so all procedures are completely understood before performing any installation steps. Contact S&S with any questions you may have if any steps are unclear or any abnormalities occur during installation or operation of motorcycle with a S&S part on it.

● Consult an appropriate service manual for your motorcycle for correct disassembly and reassembly procedures for any parts that need to be removed to facilitate installation.

● Use good judgement when performing installation and operating motorcycle. Good judgement begins with a clear head. Don't let alcohol, drugs or fatigue impair your judgement. Start installation when you are fresh.

● Be sure all federal, state and local laws are obeyed with the installation.

● For optimum performance and safety and to minimize potential damage to carb or other components, use all mounting hardware that is provided and follow all installation instructions.

● Motorcycle exhaust fumes are toxic and poisonous and must not be inhaled. Run motorcycle in a well ventilated area where fumes can dissipate.

IMPORTANT NOTICE:

Statements in this instruction sheet preceded by the following words are of special significance.

⚠ **WARNING**

Means there is the possibility of injury to yourself or others.

⚠ **CAUTION**

Means there is the possibility of damage to the part or motorcycle.

NOTE

Other information of particular importance has been placed in italic type.

S&S recommends you take special notice of these items.

WARRANTY:

All S&S parts are guaranteed to the original purchaser to be free of manufacturing defects in materials and workmanship for a period of twelve (12) months from the date of purchase. Merchandise that fails to conform to these conditions will be repaired or replaced at S&S's option if the parts are returned to us by the purchaser within the 12 month warranty period or within 10 days thereafter.

In the event warranty service is required, the original purchaser must call or write S&S immediately with the problem. Some problems can be rectified by a telephone call and need no further course of action.

A part that is suspect of being defective must not be replaced by a Dealer without prior authorization from S&S. If it is deemed necessary for S&S to make an evaluation to determine whether the part was defective, a return authorization number must be obtained from S&S. The parts must be packaged properly so as to not cause further damage and be returned prepaid to S&S with a copy of the original invoice of purchase and a detailed letter outlining the nature of the problem, how the part was used and the circumstances at the time of failure. If after an evaluation has been made by S&S and the part was found to be defective, repair, replacement or refund will be granted.

ADDITIONAL WARRANTY PROVISIONS:

(1) S&S shall have no obligation in the event an S&S part is modified by any other person or organization.

(2) S&S shall have no obligation if an S&S part becomes defective in whole or in part as a result of improper installation, improper maintenance, improper use, abnormal operation, or any other misuse or mistreatment of the S&S part.

(3) S&S shall not be liable for any consequential or incidental damages resulting from the failure of an S&S part, the breach of any warranties, the failure to deliver, delay in delivery, delivery in non-conforming condition, or for any other breach of contract or duty between S&S and a customer.

(4) S&S parts are designed exclusively for use in Harley-Davidson® and other American v-twin motorcycles. S&S shall have no warranty or liability obligation if an S&S part is used in any other application.

⚠ WARNING

The safety of the motorcycle rider is dependent of proper installation of this product. If you are not certain of your capabilities or do not have the correct tools for this installation, please consult a shop to have it done. Improper installtion of this product could result in injury or death to the rider.

S&S® valve spring and collar kits PN 90-2069 accommodate valve lifts up to .585" using standard length, 5/16" diameter valves, and are compatible with stock style valve guides and valve guide seals. These spring kits are available with S&S Super Stock® cylinder heads for Harley-Davidson® Evolution® and Twin Cam 88® engines.

NOTE: *Spring kit components are not interchangeable with those from other S&S valve spring kits.*

⚠ CAUTION

Mixing of valves, springs or collars between S&S Sidewinder® springs and other S&S spring kits can cause extensive engine damage not covered under warranty.

Installation of PN 90-2069 spring kits does not usually require modification for S&S or most stock heads. Exceptions are Buell® Thunderstorm heads and certain Sportster® models and big twin heads with different machining in valve spring pockets. In such cases, removing a small amount of material (approximately .030") from O.D. of S&S bottom collar should allow collar to rest flat in spring pocket for correct installation. It may be necessary to machine the valve spring pocket deeper to achieve the correct installed height when installing springs in Twin Cam 88® cylinder heads.

PN 90-2069 spring pressures are as follows at 1.800" installed height: Closed valve - 125 lbs; .585" lift - 330 lbs.

Spring Installation Procedure

1. Remove heads from engine and disassemble. If cylinder heads/valves are to be reconditioned, proceed at this time according to standard procedure. Refer to Harley-Davidson® service manual as necessary.

2. Place lower spring collar in valve spring pocket in head. Place spring on collar. Collar must sit flat on cylinder head and spring coils must not contact sides of spring pocket in head. If necessary, machine lower collar and/or spring pocket to obtain minimum clearance of .030". Do not modify spring in any way.

3. Using following procedure, determine installed spring height and clearance between top collar and valve guide.
   A. Lubricate valve stem and install valve in guide.
   B. Install bottom collar, valve seal, top collar, and valve keepers. Pull top collar tightly against keepers to seat keepers in collar.
   C. While holding valve firmly against seat in closed position, measure installed spring height (distance between lower valve spring seating surface and outside step of top collar). See Figure A, Dimension A. Record measurement.
   D. Measure distance between top collar keepers and top of valve guide or seal (if applicable). See Figure A, Dimension B. Distance must be at least .060" greater than valve lift of cam to be used. If dimension B is not .060" greater than valve lift, valve guide must be shortened to obtain required clearance.

Dimension A:
Installed spring height must be adjusted to 1.800" ± .010".

Dimension B:
Must be .060" greater than valve lift for camshaft to be used.

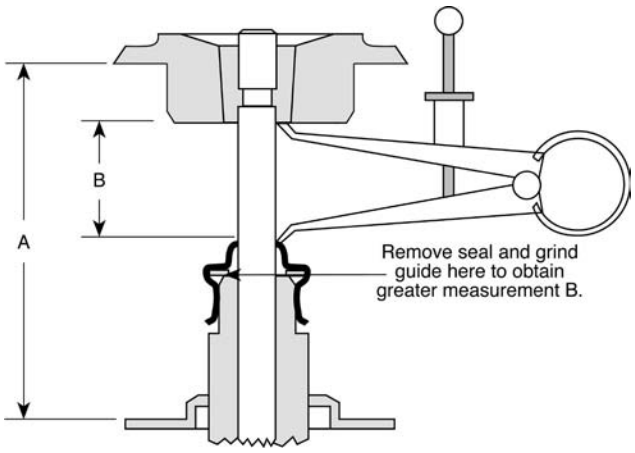

Figure A

E. Repeat Steps A-D for remaining valves and record all measurements. Be sure to keep track of all parts during assembly to assure they are installed in same location and with same valves clearances were measured with

4. Adjust installed spring height for all valves to 1.800" ± .010". If spring height is too high, place shims under lower collar to achieve correct spring height. Shims are available from S&S® and local sources such as automotive parts houses. If spring height is too low, grind valve or valve seat, or machine bottom of valve spring pocket to achieve correct spring height. Special valve spring pocket cutting tools are available from various tool manufacturers.

NOTE- *Installed spring height is height when valve and spring are installed and in closed position. Correct installed spring height for S&S PN 90-2069 is 1.800" ± .010".*

⚠ CAUTION

- **Installing springs at height less than recommended dimension will cause rapid spring fatigue resulting in possible engine damage. Engine should be frequently disassembled for spring tension measurement.**
- **Installing springs at height above recommended dimension will decrease spring tension resulting in possible valve float and engine damage.**
- **Failure to establish required clearances may cause valve seal failure and other, more extensive engine damage not covered under warranty.**

⚠ WARNING

Valve spring assembly is under considerable tension when compressed and is potentially dangerous. Wear eye protection and take due caution when checking for coil bind and during installation. After assembly, carefully strike tip of valve stem with plastic hammer to insure that keepers are seated. Direct spring assembly away from face and body during this procedure.

5. Install valves and valve springs in heads. Install all S&S® Sidewinder® springs with smaller O.D. toward top collar. Be sure valve guide seals are in place. Install top collar and keepers.

NOTE- *Installed height should be the same for each spring assembly.*

6. Confirm that rocker arm does not contact top collar. This is most likely to occur when valve is fully closed. Clearance should be at least .040".

7. Confirm rocker arm to rocker cover clearance.
   A. Install pushrods and rocker assemblies. Adjust pushrods per manufacturer's instructions.
   B. Place thin deposit of clay or putty on inside of top rocker cover directly above pushrod and valve spring areas.
   C. Install top cover and rotate flywheels two complete revolutions (720°).

NOTE- *Do not force engine if resistance is encountered. Instead remove top cover and determine cause.*

   D. Remove top cover and examine clay for indentation caused by rocker arm. Thickness of clay beneath indentation should be at least .060". Carefully remove metal from cover or rocker arm to obtain correct clearance.

NOTE- *Remove minimum amount of metal needed for correct clearance. Care must be taken not to break through rocker covers or alter rocker arm heat treatment by overheating while grinding. Oil is supplied to top end through pushrods and rocker arms, so it is also important not to disturb oil passages.*

PROVEN

S&S

PERFORMANCE

Because every industry has a leader