Instruction 51-1174
5-3-06

Copyright© 2003, 2005, 2006
by S&S Cycle, Inc.

All rights reserved.
Printed in the U.S.A.

S&S® Cycle, Inc.
235 Causeway Blvd.
La Crosse, Wisconsin 54603
Phone: 608-627-1497 • Fax: 608-627-1488
Technical Service Phone: 608-627-TECH (8324)
Technical Service Email: sstech@sscycle.com
Website: www.sscycle.com

Because every industry has a leader

Installation Instructions: S&S® Torque Plate Kit for 4⅜" Bore Cylinders

The plates in this kit should only be used for honing S&S 4⅜" bore cylinders.

DISCLAIMER:

S&S parts are designed for high performance, off road, racing applications and are intended for the very experienced rider only. The installation of S&S parts may void or adversely effect your factory warranty. In addition such installation and use may violate certain federal, state, and local laws, rules and ordinances as well as other laws when used on motor vehicles used on public highways, especially in states where pollution laws may apply. Always check federal, state, and local laws before modifying your motorcycle. It is the sole and exclusive responsibility of the user to determine the suitability of the product for his or her use, and the user shall assume all legal, personal injury risk and liability and all other obligations, duties, and risks associated therewith.

The words Harley®, Harley-Davidson®, H-D®, Sportster®, Evolution®, and all H-D part numbers and model designations are used in reference only. S&S Cycle is not associated with Harley-Davidson, Inc.

SAFE INSTALLATION AND OPERATION RULES:

Before installing your new S&S part it is your responsibility to read and follow the installation and maintenance procedures in these instructions and follow the basic rules below for your personal safety.

● Gasoline is extremely flammable and explosive under certain conditions and toxic when inhaled. Do not smoke. Perform installation in a well ventilated area away from open flames or sparks.

● If motorcycle has been running, wait until engine and exhaust pipes have cooled down to avoid getting burned before performing any installation steps.

● Before performing any installation steps disconnect battery to eliminate potential sparks and inadvertent engagement of starter while working on electrical components.

● Read instructions thoroughly and carefully so all procedures are completely understood before performing any installation steps. Contact S&S with any questions you may have if any steps are unclear or any abnormalities occur during installation or operation of motorcycle with a S&S part on it.

● Consult an appropriate service manual for your motorcycle for correct disassembly and reassembly procedures for any parts that need to be removed to facilitate installation.

● Use good judgement when performing installation and operating motorcycle. Good judgement begins with a clear head. Don't let alcohol, drugs or fatigue impair your judgement. Start installation when you are fresh.

● Be sure all federal, state and local laws are obeyed with the installation.

● For optimum performance and safety and to minimize potential damage to carb or other components, use all mounting hardware that is provided and follow all installation instructions.

● Motorcycle exhaust fumes are toxic and poisonous and must not be inhaled. Run motorcycle in a well ventilated area where fumes can dissipate.

IMPORTANT NOTICE:

Statements in this instruction sheet preceded by the following words are of special significance.

⚠ **WARNING**

Means there is the possibility of injury to yourself or others.

⚠ **CAUTION**

Means there is the possibility of damage to the part or motorcycle.

NOTE

Other information of particular importance has been placed in italic type.

S&S recommends you take special notice of these items.

WARRANTY:

All S&S parts are guaranteed to the original purchaser to be free of manufacturing defects in materials and workmanship for a period of twelve (12) months from the date of purchase. Merchandise that fails to conform to these conditions will be repaired or replaced at S&S's option if the parts are returned to us by the purchaser within the 12 month warranty period or within 10 days thereafter.

In the event warranty service is required, the original purchaser must call or write S&S immediately with the problem. Some problems can be rectified by a telephone call and need no further course of action.

A part that is suspect of being defective must not be replaced by a Dealer without prior authorization from S&S. If it is deemed necessary for S&S to make an evaluation to determine whether the part was defective, a return authorization number must be obtained from S&S. The parts must be packaged properly so as to not cause further damage and be returned prepaid to S&S with a copy of the original invoice of purchase and a detailed letter outlining the nature of the problem, how the part was used and the circumstances at the time of failure. If after an evaluation has been made by S&S and the part was found to be defective, repair, replacement or refund will be granted.

ADDITIONAL WARRANTY PROVISIONS:

(1) S&S shall have no obligation in the event an S&S part is modified by any other person or organization.

(2) S&S shall have no obligation if an S&S part becomes defective in whole or in part as a result of improper installation, improper maintenance, improper use, abnormal operation, or any other misuse or mistreatment of the S&S part.

(3) S&S shall not be liable for any consequential or incidental damages resulting from the failure of an S&S part, the breach of any warranties, the failure to deliver, delay in delivery, delivery in non-conforming condition, or for any other breach of contract or duty between S&S and a customer.

(4) S&S parts are designed exclusively for use in Harley-Davidson® and other American v-twin motorcycles. S&S shall have no warranty or liability obligation if an S&S part is used in any other application.

INTRODUCTION

S&S® cylinder torque plates simulate the stress cylinders experience when installed on an engine during honing operations. A cylinder that has been honed between torque plates holds to its installed dimensions better than a cylinder honed without torque plates.

Torque plates for 4⅜" bore cylinders can be used with either horizontal Sunnen® type hones, or portable hand held hones.

If a vertical Sunnen® type hone is used, a holding fixture will have to be fabricated. A boring plate/honing fixture is not available from S&S for use with 4⅜" bore torque plates.

KIT CONTENTS

Torque Plate Kit 53-0055 is for 4⅜" bore cylinders. It includes the following parts:

Part 53-0056 (1) Head-end torque plate
Part 53-0057 (1) Base-end torque plate
Part 53-0014 (1) Torque plate stabilizer arm
Part 50-0192 (4) 7/16" - 20 x 7" Grade 8 SHC screws

NOTES:

- *Always observe professional practices and wear safety glasses and protective clothing when operating machinery.*
- *S&S torque plates are hardened and must not come into contact with cutter or honing stones during operation.*

NOTE: *Torque values for torque plate hardware may vary significantly from values used to assemble engine.*

⚠ CAUTION

Improper operation of machinery or fixtures can damage motorcycle parts, tools and/or machinery components.

⚠ WARNING

Improper operation of machinery and associated equipment can cause personal injury to operator and others nearby. Contact a professional mechanic if unsure of correct procedure.

A. TORQUE PLATE INSTALLATION

The first step of any boring or honing operation is installing and torquing the plates to the cylinder. **See Picture 1** and the following instruction.

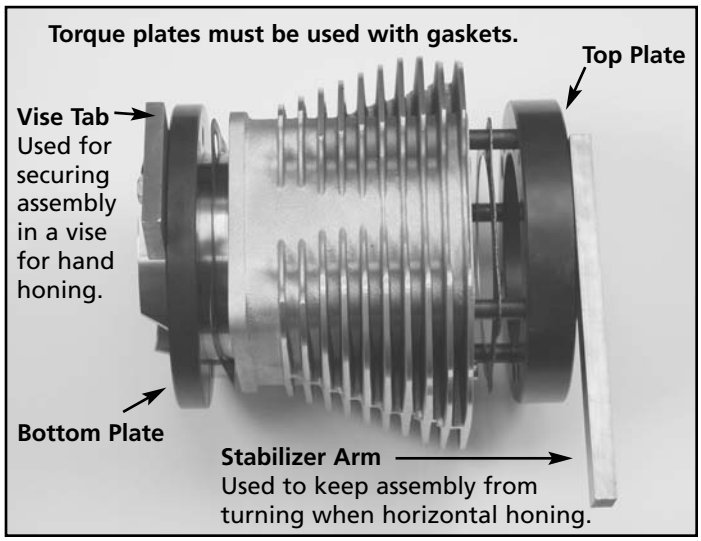

Picture 1

NOTE: *The front and rear stud pattern of S&S 4⅜" bore engines is the mirror image of a non-symmetrical pattern. The top and bottom torque plates can be installed with either side facing towards the cylinder, but hole alignment depends on whether the plate is used on a front cylinder, or a rear cylinder. If rotating the plate around the pattern doesn't align the holes, flip the plate over and try again. The top plate is always used at the top, the bottom plate is always used at the bottom.*

1. Place base gasket over end of cylinder spigot.
2. Place bottom torque plate over end of cylinder spigot.
3. Apply light coat of 20W50 motor oil to threads and underside of heads of the four provided 7/16"-20 x 7" socket head bolts.
4. Insert the four 7/16" bolts thru the holes in the top plate. The heads of the bolts go into the countersinks in the top plate.
5. Place a head gasket over the four 7/16" bolts.
6. Insert the 7/16" bolts with the gasket and top plate thru the cylinder. The head gasket will be between the top plate and the cylinder.

NOTE: *Install cylinder head dowels to locate top plate. The torque plate must be centered on cylinder bore so boring cutter or honing stones will not strike the torque plate during operation.*

7. Torque bolts to 40 ft-lbs. in same pattern used to install heads during engine assembly.

   See Figure 1. Tighten bolts in following stages:

Stage I	10 ft-lbs.
Stage II	20 ft-lbs.
Stage III	40 ft-lbs.

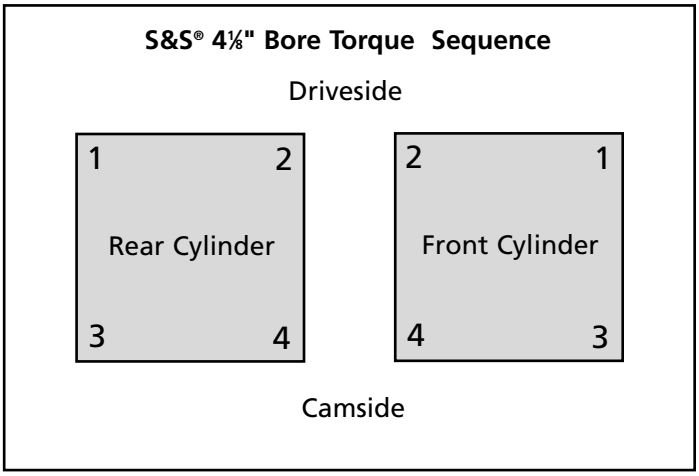

Figure 1

B. HONING 4⅜" BORE CYLINDERS USING TORQUE PLATES

Honing on a horizontal hone

1. When using a horizontal style hone, care must be taken to avoid honing bore out of round. The cylinder must be supported so that the stones cut evenly around the inside of the cylinder. Unless properly supported, the combined weight of the assembled cylinder and torque plate can cause the stones to cut unevenly resulting in irreparable damage to cylinder.
2. A stabilizer arm (53-0014) is supplied with the plate set. The arm rests against the bar of a horizontal hone, and keeps the cylinder from rotating during the honing operation. The two pins at one end of the bar are inserted into matching holes in the bottom plate. For stabilizer arm detail, **See Picture 1.**
3. The cylinder can be honed from either end. After making a few strokes, stop and measure progress with a dial bore gage. After each measurement, it is a good practice to alternate honing from one end then the other. This will help achieve a straight, round bore.
4. Do not reuse the gaskets from the boring/honing operation when assembling the engine.

Honing in a vise using a portable hand held hone.

1. A vice tab (53-0034) is supplied with the plate set. The tab allows the lower torque plate to be held in a vice. The tab has two pins that are inserted into matching holes on the lower torque plate, and it is held in place with a supplied 5/16" x 1" bolt. For vice tab detail, **See Picture 1.**
2. The cylinder can be honed from either end. After making a few strokes, stop and measure progress with a dial bore gage. After each measurement, it is a good practice to alternate honing from one end then the other. This will help achieve a straight, round bore.
3. Do not re-use the gaskets from the boring/honing operation when assembling the engine.

PROVEN S&S PERFORMANCE

Because every industry has a leader