Instruction 51-1201
5-23-06

Copyright® 1998, 2005, 2006
by S&S Cycle, Inc.

All rights reserved.
Printed in the U.S.A.

S&S® Cycle, Inc.
235 Causeway Blvd
La Crosse, Wisconsin 54603
Phone: 608-627-1497 • Fax: 608-627-1488
Technical Service Phone: 608-627-TECH (8324)
Technical Service Email: sstech@sscycle.com
Website: www.sscycle.com

Because every industry has a leader

124ci V-Series TÜV Specifications

Displacement: 124ci, 2032cc
Bore X Stroke: 4⅛" x 4⅝"
Compression Ratio: 9.5:1

TÜV Specifications—All TÜV-approved V-Series engines are manufactured to meet stringent standards for emissions and noise. Listed below are the specifications that differ from those found in the standard V-Series manual included with your engine.

Cam: S&S® 547

Carburetor: Super G (4-hole emissions)
Main Jet: .076
Intermediate jet: .0295
Air Bleed: .40
Air Filter: Carbon element
Air Intake: S&S TÜV design
Manifold: TÜV design

Ignition: IST with Emissions Map

Tappets: Hydraulic S&S
Valve Springs: Dual .600
Intake Valves: 2.00"
Exhaust Valves: 1.605"
Rocker Arms: S&S forged non-roller
Heads: S&S TÜV fin profile
Cylinders: S&S 5.087" TÜV design
Flywheel: 8.25" with EFI timing notches

1. Air cleaner cover
   Chrome.....**17-0378**
   Black.....**17-0384**
   Desperado.....**17-0004**
   Patriot.....**17-0385**
2. Element
   Pleated.....**17-0054**
   Pleated carbon – TÜV.....**17-0375**
3. Backplate
   TÜV 1984-'99 models.....**17-0388**
   TÜV 4⅛" bore.....**17-0395**
4. Cover screw, chrome *(10 Pack)*.....**50-0094**
   Black *(3 Pack)*.....**50-0310**
   TÜV spec *(10 Pack)*.....**50-0347**
5. Backplate screw *(10 Pack)*.....**50-0095**
6. Fast idle friction washer *(10 Pack)*.....**50-7058**
7. Fast idle steel washer *(10 Pack)*.....**50-7061**
8. Fast idle nylon washer *(10 Pack)*.....**50-7060**
9. Fast idle lever.....**17-0329**
10. Fast idle brass washer *(10 Pack)*.....**50-7010**
11. Fast idle lever screw *(10 Pack)*.....**50-0062**
12. Shims *(10 Packs)*
    a. 4⅛" bore
       5/16" x .018".....**50-7107**
       5/16" x .030".....**50-7070**
       5/16" x .048".....**50-7068**
       5/16" x .105".....**50-7062**
    b. TÜV 1984-'99 models
       ⅝" x .025".....**50-7110**
       ⅝" x .050".....**50-7111**
       ⅝" x .075".....**50-7112**
13. Breather fitting.....**17-0337**
14. Crankcase breather hose
    TÜV 1984-'99 models.....**17-0339**
15. Backplate plug ⅛"-27 *(10 Pack)*.....**50-1015**
16. Flatwasher – 5/16" x 1/16" *(10 Pack)*.....**50-7069**
17. Mounting bracket bolt – 4⅛" bore
    5/16"-18 x 1¼" *(10 Pack)*.....**50-0148**
18. Screw vent fitting – (NS)*.....**17-0347**
19. Screw, air cleaner to head – (NS)*.....**17-0346**
20. Washer, silicone coated steel .520"
    (10 Pack) – (NS)*.....**50-7057**
21. Plate, air cleaner noise reducer.....**17-0389**
22. Rubber isolator mounts *(3 Pack)*.....**50-8511**
23. Shim, spacers, ½" OD x ¼" ID x .080"
    (3 Pack).....**50-7970**
24. Shim, .850" x .325" x .400".....**50-7027**
25. Spring clamps (NS)* *(10 Pack)*.....**50-8088**

* Parts followed by an NS means parts are not shown.

TÜV 4⅛" BORE

17-0431

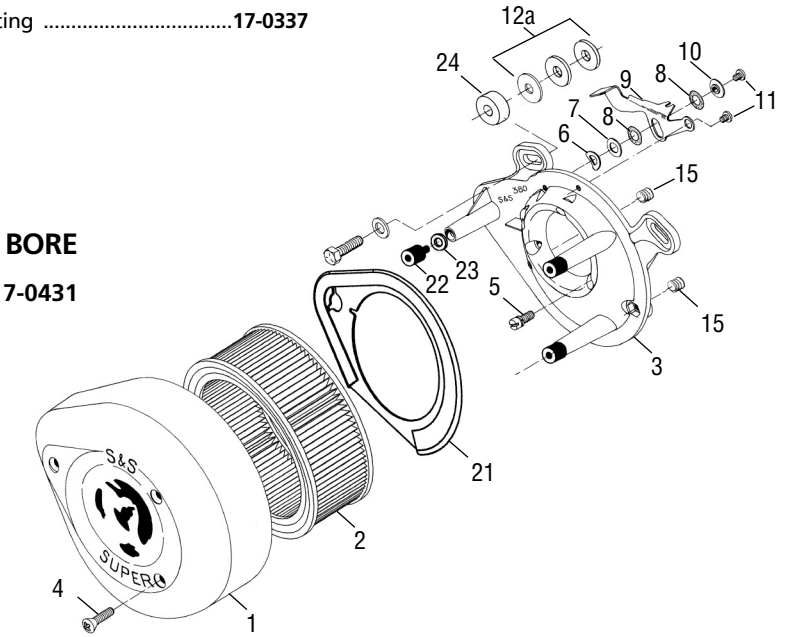

Sample