Instruction 51-1048
Revised 4-19-02
Copyright © 2001, 2002
by S&S Cycle, Inc.
All rights reserved.
Printed in the U.S.

S&S® Cycle, Inc.
14025 County Hwy. G Box 215
Viola, Wisconsin 54664
Phone: 608-627-1497 • Fax: 608-627-1488
Technical Service Phone: 608-627-TECH (8324)
Technical Service Email: sstech@sscycle.com
Website: www.sscycle.com

S&S 510 Chain Drive Camshaft Hardware Information

S&S requires the use of the roller bearing on the rear cam and the Andrews sprocket when chain drive cams are used. This combination of parts requires a special thickness washer (#50-7139).

This packet includes 2 washers and one screw. Part #50-7130 and #50-0100 are used on the outside of the Andrews sprocket. Part #50-7139 is identical to the thrust washer included with the Roller Bearing Kit, so it can be used on either side of the roller bearing and is used to replace the OEM thick spacer.

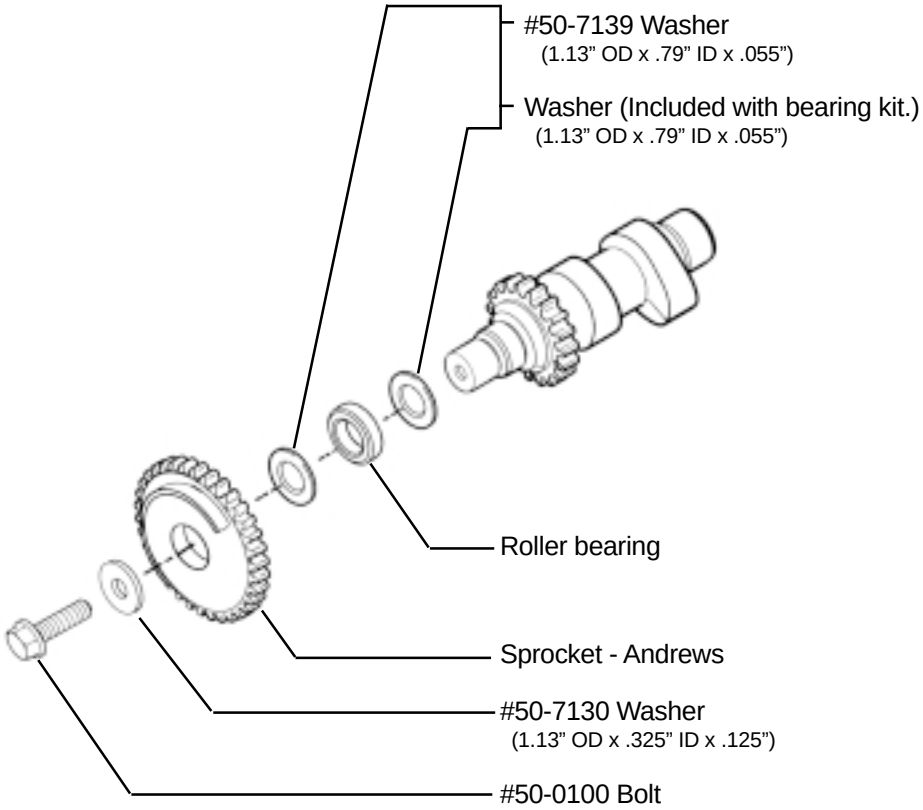
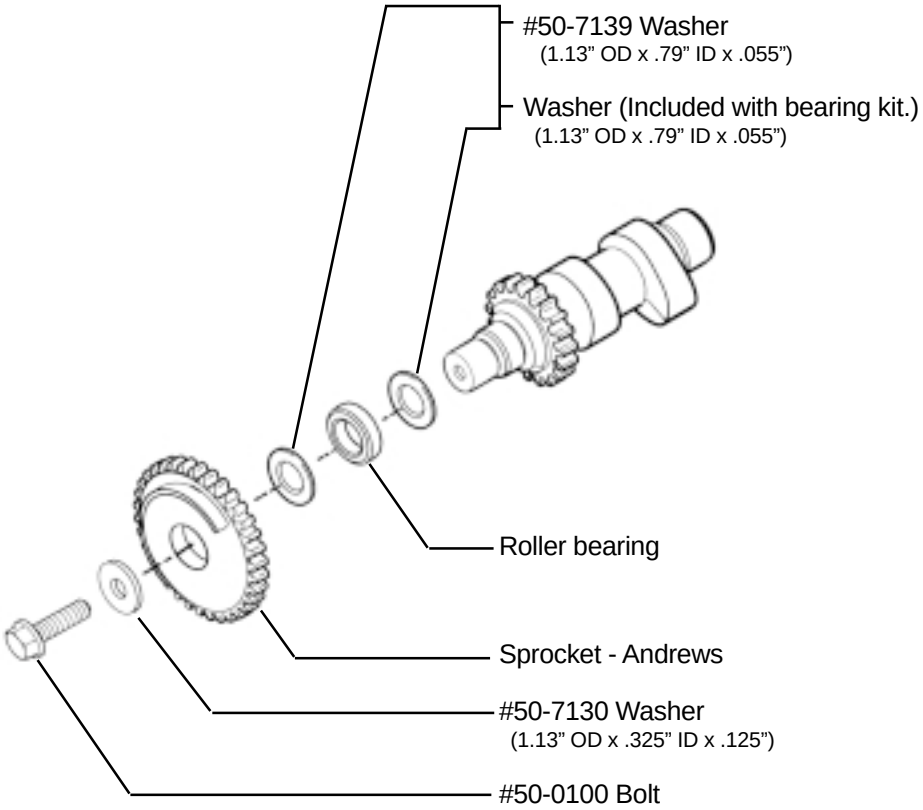
Instruction 51-1048
Revised 4-19-02
Copyright © 2001, 2002
by S&S Cycle, Inc.
All rights reserved.
Printed in the U.S.
S&S® Cycle, Inc.
14025 County Hwy. G Box 215
Viola, Wisconsin 54664
Phone: 608-627-1497 • Fax: 608-627-1488
Technical Service Phone: 608-627-TECH (8324)
Technical Service Email: sstech@sscycle.com
Website: www.sscycle.com
S&S 510 Chain Drive Camshaft Hardware Information
S&S requires the use of the roller bearing on the rear cam and the Andrews sprocket when chain drive cams are used. This combination of parts requires a special thickness washer (#50-7139).
This packet includes 2 washers and one screw. Part #50-7130 and #50-0100 are used on the outside of the Andrews sprocket. Part #50-7139 is identical to the thrust washer included with the Roller Bearing Kit, so it can be used on either side of the roller bearing and is used to replace the OEM thick spacer.