Instruction 510-0056
12-03-13

Copyright ©2011, 2012, 2013
by S&S® Cycle, Inc.

All rights reserved.
Printed in the U.S.A.

S&S® Cycle, Inc.

14025 Cty Hwy G PO Box 215
Viola, Wisconsin 54664
Phone: 608-627-1497 • Fax: 608-627-1488
Technical Service Phone: 608-627-TECH (8324)
Technical Service Email: sstech@sscycle.com
Website: www.sscycle.com

Installation Instructions: S&S® Stealth Air Cleaner Kit for 1993 and Up Stock CV Carburetor and 2001 and Up Stock Delphi EFI

DISCLAIMER:

S&S parts are designed for high performance, closed course, racing applications and are intended for the very experienced rider only. The installation of S&S parts may void or adversely affect your factory warranty. In addition such installation and use may violate certain federal, state, and local laws, rules and ordinances as well as other laws when used on motor vehicles used on public highways, especially in states where pollution laws may apply. Always check federal, state, and local laws before modifying your motorcycle. It is the sole and exclusive responsibility of the user to determine the suitability of the product for his or her use, and the user shall assume all legal, personal injury risk and liability and all other obligations, duties, and risks associated therewith.

The words Harley®, Harley-Davidson®, H-D®, Sportster®, Evolution®, and all H-D part numbers and model designations are used in reference only. S&S Cycle is not associated with Harley-Davidson, Inc.

SAFE INSTALLATION AND OPERATION RULES:

Before installing your new S&S part it is your responsibility to read and follow the installation and maintenance procedures in these instructions and follow the basic rules below for your personal safety.

- Gasoline is extremely flammable and explosive under certain conditions and toxic when breathed. Do not smoke. Perform installation in a well ventilated area away from open flames or sparks.
- If motorcycle has been running, wait until engine and exhaust pipes have cooled down to avoid getting burned before performing any installation steps.
- Before performing any installation steps disconnect battery to eliminate potential sparks and inadvertent engagement of starter while working on electrical components.
- Read instructions thoroughly and carefully so all procedures are completely understood before performing any installation steps. Contact S&S with any questions you may have if any steps are unclear or any abnormalities occur during installation or operation of motorcycle with a S&S part on it.
- Consult an appropriate service manual for your motorcycle for correct disassembly and reassembly procedures for any parts that need to be removed to facilitate installation.
- Use good judgment when performing installation and operating motorcycle. Good judgment begins with a clear head. Don't let alcohol, drugs or fatigue impair your judgment. Start installation when you are fresh.
- Be sure all federal, state and local laws are obeyed with the installation.
- For optimum performance and safety and to minimize potential damage to carb or other components, use all mounting hardware that is provided and follow all installation instructions.
- Motorcycle exhaust fumes are toxic and poisonous and must not be breathed. Run motorcycle in a well ventilated area where fumes can dissipate.

IMPORTANT NOTICE:

Statements in this instruction sheet preceded by the following words are of special significance.

WARNING

Means there is the possibility of injury to yourself or others.

CAUTION

Means there is the possibility of damage to the part or motorcycle.

NOTE

Other information of particular importance has been placed in italic type.

S&S recommends you take special notice of these items.

WARRANTY:

All S&S parts are guaranteed to the original purchaser to be free of manufacturing defects in materials and workmanship for a period of twelve (12) months from the date of purchase. Merchandise that fails to conform to these conditions will be repaired or replaced at S&S's option if the parts are returned to us by the purchaser within the 12 month warranty period or within 10 days thereafter.

In the event warranty service is required, the original purchaser must call or write S&S immediately with the problem. Some problems can be rectified by a telephone call and need no further course of action.

A part that is suspect of being defective must not be replaced by a Dealer without prior authorization from S&S. If it is deemed necessary for S&S to make an evaluation to determine whether the part was defective, a return authorization number must be obtained from S&S. The parts must be packaged properly so as to not cause further damage and be returned prepaid to S&S with a copy of the original invoice of purchase and a detailed letter outlining the nature of the problem, how the part was used and the circumstances at the time of failure. If after an evaluation has been made by S&S and the part was found to be defective, repair, replacement or refund will be granted.

ADDITIONAL WARRANTY PROVISIONS:

(1) S&S shall have no obligation in the event an S&S part is modified by any other person or organization.

(2) S&S shall have no obligation if an S&S part becomes defective in whole or in part as a result of improper installation, improper maintenance, improper use, abnormal operation, or any other misuse or mistreatment of the S&S part.

(3) S&S shall not be liable for any consequential or incidental damages resulting from the failure of an S&S part, the breach of any warranties, the failure to deliver, delay in delivery, delivery in non-conforming condition, or for any other breach of contract or duty between S&S and a customer.

(4) S&S parts are designed exclusively for use in Harley-Davidson® and other American v-twin motorcycles. S&S shall have no warranty or liability obligation if an S&S part is used in any other application.

Kit Contents:

- Backplate
- Filter
- Filter Top Plate
- 243 Blue Loctite®
- QTY of 3 - ¼" X 20 Backplate Screws
- QTY of 2 – Breather Bolts
- QTY of 2 – ¼" X 20 Flanged Button Head Screws
- QTY of 8 – Rubber Coated Washers
- Cover Screw
- Backplate Gasket
- CARB EO # Label

⚠ WARNING

- **The safety of the motorcycle rider is dependent of proper installation of this product. If you are not certain of your capabilities or do not have the correct tools for this installation, please consult a shop to have it done. Improper installation of this product could result in injury or death to the rider.**
- **Be sure to disconnect the battery of your motorcycle before starting on this procedure. Accidental starting of the motorcycle could cause injury to you or others around you during the installation.**
- **Installation of the Stealth Air Cleaner on carbureted motorcycles is limited to closed course competition use only.**

NOTE: *The Stealth Air Cleaner may be used on 2001 and up fuel injected highway motorcycles*

Disassembly

Stock Air Cleaner Removal

1- Disconnect the negative battery cable from the motorcycle and route it away from any metal parts in the area.
2- Remove the stock air cleaner cover and backplate assembly following your service manual for the specific year and model bike you are working on.

Installation

Installing the S&S Stealth Air Cleaner Kit

1- Locate the S&S backplate and the three back plate screws.
2- Install the three ¼" X 20 screws in the backplate as illustrated in **Picture 1**.

Backplate Screws

Picture 1

NOTE: *The backplate has interference threads tapped into it so the screws will thread in with some force.*

3- Slide the supplied gasket over the screws as illustrated in **Picture 2**.

Picture 2

4- Locate the two breather bolts and the eight rubber coated washers. Put one washer on each breather bolt and pass through the backplate mounting holes. Install another rubber coated washer onto each breather bolt. As illustrated in **Picture 3**.

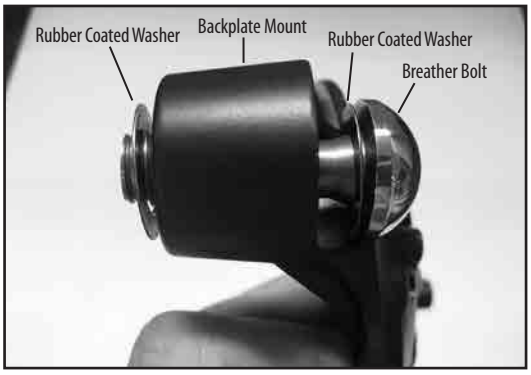

Picture 3

5- Apply a drop of 243 blue Loctite® to the threads of each screw and breather bolt. **Picture 4** illustrates all five fasteners that require 243 blue Loctite.

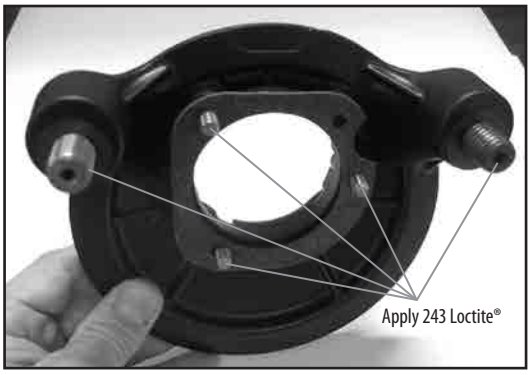

Picture 4

6- Fit the backplate to the carburetor or throttle body and the cylinder heads. Start the threads of all the screws and tighten evenly until the backplate is snug.
7- Now that the backplate is positioned, finish torque the ¼" X 20 fasteners to 72 in.- lbs. as illustrated in **Picture 5**.

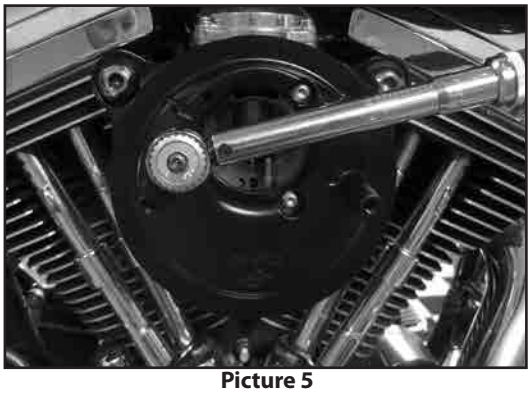

Picture 5

8- Check between the cylinder head and the backplate for air gaps.

NOTE: *A feeler gauge works well for determining the amount of gap, if any, between the head and the backplate as illustrated in* ***Picture 6****.*

Picture 6

9- If a gap less than the thickness of a rubber coated washer is present, torque the breather bolts down 10 -12 ft.-lbs. If a gap of more than the thickness of a rubber coated washer is present, determine how much and select the appropriate number of rubber coated washers needed to take up the gap.

10- If more than one rubber coated washer is needed between the head and backplate, back out the breather bolts and install the correct number of rubber coated washers.

11- Thread the breather bolts in and finish torque breather bolts to 10-12 ft.-lbs.

12- Locate the filter, plastic filter top plate and the two ¼" X 20 flanged head fasteners as illustrated in **Picture 7**.

Picture 7

13- Apply a drop of 243 blue Loctite® to the threads of each ¼" X 20 flanged head screw and set aside.

14- Hold the filter on the backplate and put the filter top plate on top of the filter making sure that the word "Down" is facing down and sitting flat on the filter and locked into the groove as illustrated in **Picture 8**.

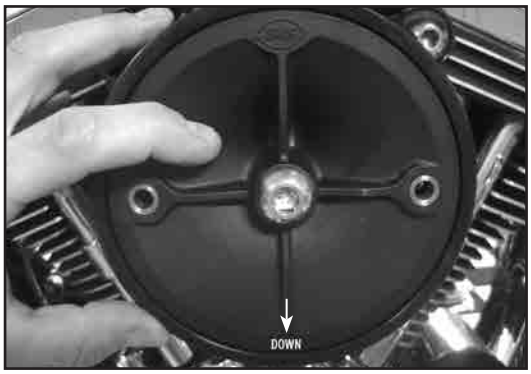

Picture 8

15- Pass the ¼" X 20 flanged head screws through the plastic top filter plate, thread in and tighten down evenly until snug and then finish torque to 72 in.-lbs. as illustrated in **Picture 9, below left**.

16- Remove the 5⁄16" button head screw from the plastic top filter plate. **Picture 10, below right,** illustrates the button head screw.

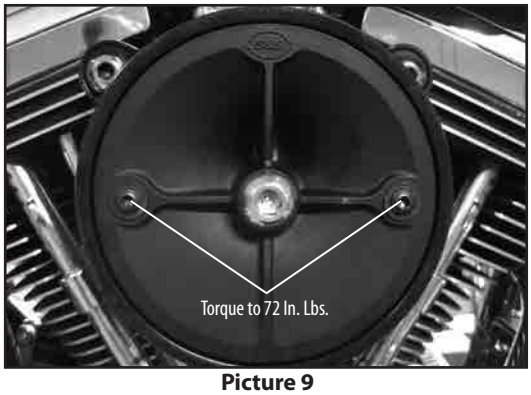

Picture 9

Picture 10

17- Attach an S&S® air cleaner cover or the Harley-Davidson® Twin Cam 88®, 96™, or 103™ stock air cleaner cover to the stealth air cleaner kit by installing the 5⁄16" button head screw with 243 blue Loctite® applied to the threads and torque to 10 ft.-lbs.

18- On 2001 and later fuel injected bikes apply the included label containing the EO number to the frame down tube above or below the factory label. Do not cover up any portion of the factory label.

Picture 11

Installation Instructions: S&S® Stealth Air Cleaner Kit for 1993 and Up Stock CV Carburetor and 2001 and Up Stock Delphi EFI

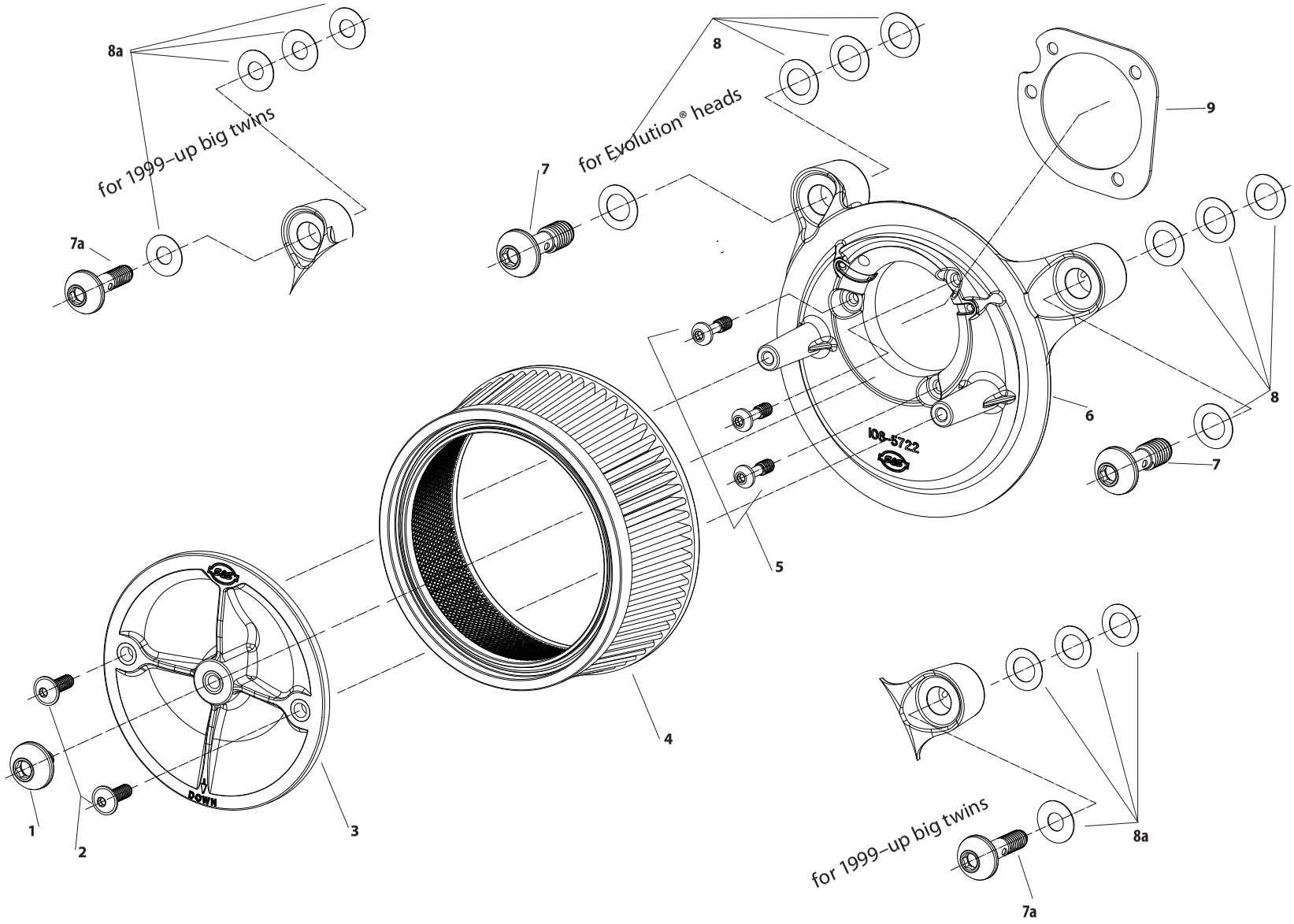

1. Screw, SHCB, 5/16-18 x .500", Polished, Stainless Steel **500-0051**

2. Screw, SHC, Flanged Button, ¼-20 UNC x .750" *(Each) 2 required* **500-0060**

3. Plate, Top, Air Filter, Molded, Plastic **170-0026**

4. Filter, Air, Tapered, Standard Pleated, 5.500" x 6.000" x 2.375",
   Cotton, Stealth Air Cleaner Kit **170-0043**

5. Screw, SHCB, ¼-20 UNC X .825" *(Each) 3 required* **500-0059**

6. Backplate, Air Cleaner, Machined, Black, Die Cast,
   1993-up Stock CV Carb, 2001-up Delphi® EFI **170-0021**

7. Screw, Backplate Vent, SHCB, ½-13 x 1-½", Polished,
   Stainless Steel *(Each) 2 required* **170-0044**

   7a. Screw, Backplate Vent, SHCB, ⅜-16 x 1-½", Polished,
   Stainless Steel *(Each) 2 required* **170-0045**

8. Washer, Flat, .520" x .880" x .024", Nitrile Rubber Coated,
   Cold Rolled Steel *(Each) 8 required* **50-7055**

   8a. Washer,Flat,.380" x .880" x .024", Nitrile Rubber Coated,
   Cold Rolled Steel *(Each) 8 required* **50-7054**

9. Gasket, Backplate, 1991-up xl/bt **106-6022**

PROVEN
S&S®
PERFORMANCE